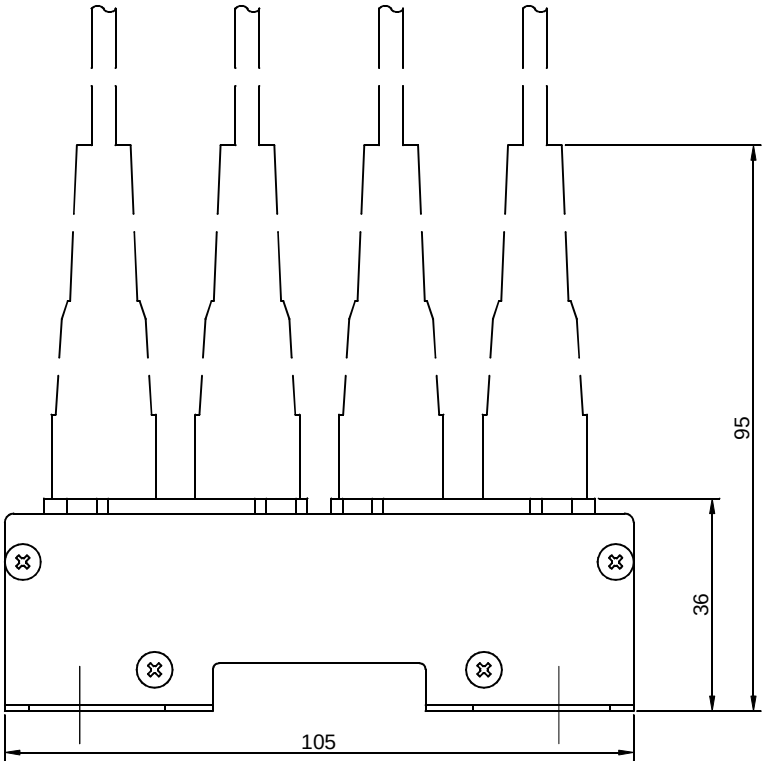
95
36
105

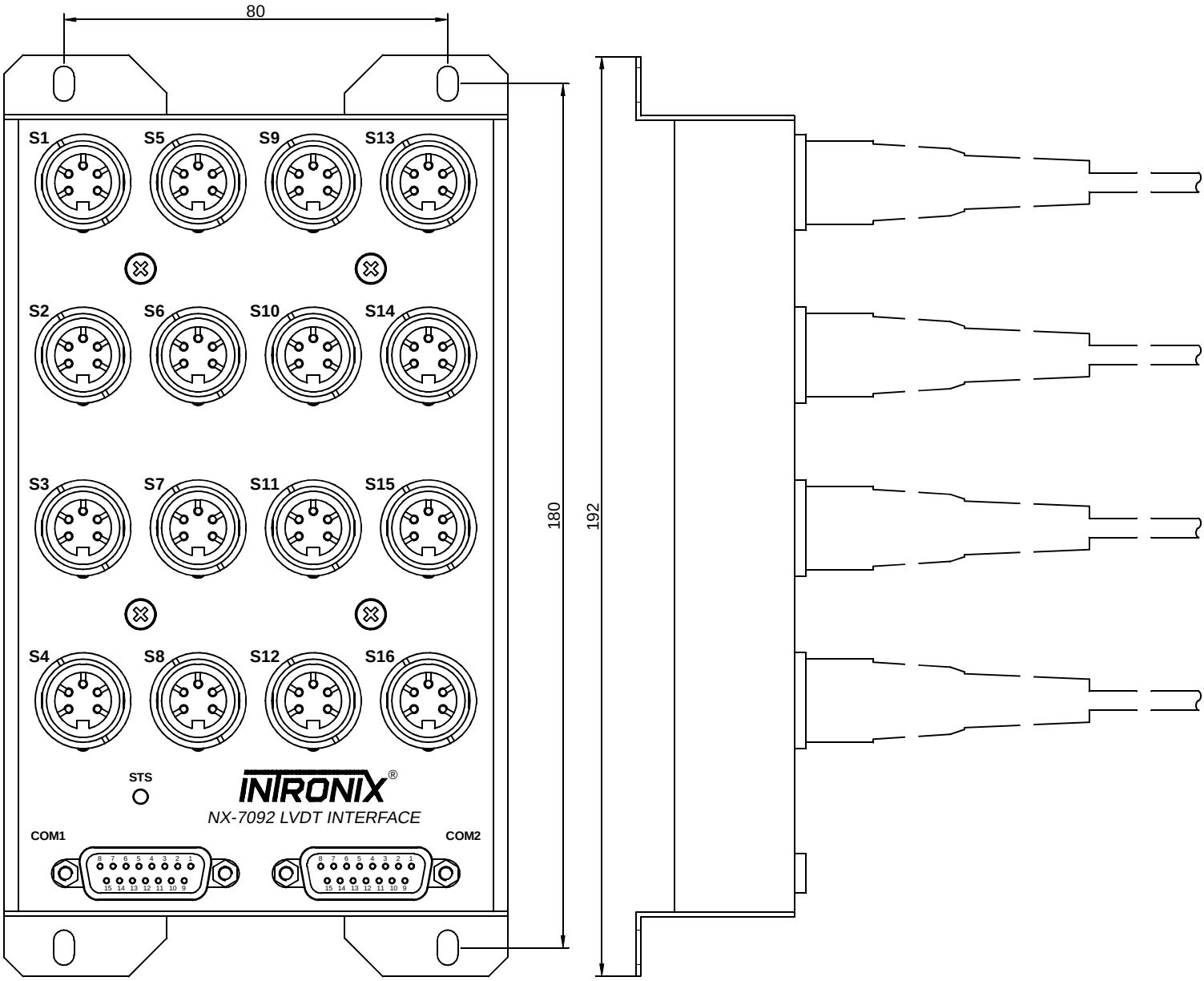
80
S1
S5
S9
S13
S2
S6
S10
S14
S3
S7
S11
S15
S4
S8
S12
S16
STS
INTRONIX®
NX-7092 LVDT INTERFACE
COM1
COM2
180
192